CHENBRO

CK12804

28-port Low Profile
SAS Expander Card

User's Manual

Version B0

September / 01 / 2009

15Fl., No.150, Jian Yi Road, Chung Ho City, Taipei Hsien, Taiwan R.O.C.,
Tel: +886 2 82265500 Fax: +886 2 82265392 Email: info@chenbro.com.tw

www.chenbro.com

Copyright

Copyright © 2008 CHENBRO Micom Co., Ltd.. All rights reserved.

Unless otherwise indicated, all materials in this manual are copyrighted by CHENBRO Micom Co., Ltd.. All rights reserved. No part of this manual, either text or image may be used for any purpose other than internal use within purchasing company. Therefore, reproduction, modification in any form or by any means, electronic, mechanical or otherwise, for reasons other than internal use, is strictly prohibited without prior written permission.

CHENBRO Micom Co., Ltd. reserves the right to make improvement and modification to the products indicated in this manual at any time. Specifications are therefore subject to change without prior notice.

Information provided in this manual is intended to be accurate and reliable. However, CHENBRO Micom Co., Ltd., assumes no responsibility for its use, nor for any infringements upon the rights of third parties, which may result from its use.

Trademark

All registered and unregistered trademarks and company names contained in this manual are property of their respective owners including, but not limited to the following.

intel is trademark of intel Corporation. LSI is trademark of LSI Corporation. Adaptec is trademark of Adaptec Inc. 3Ware is trademark of AMCC Corporation. Areca is trademark of Areca Technology Corporation.

Technical Support

CHENBRO works hard to offer our customers maximum performance from our chassis. But in case you have any problem with our product you can find supports from the following resources.

Web Support

Detail information of our products is in our website. You can find technical updates, installation guides, FAQs, technical specifications and more. Our web address is: www.chenbro.com.

Email Support

You can also fill out the technical support form at our Technical Support page. You technical issue inquiries will be sent directly to our support professionals.

Phone Support

You can also contact CHENBRO HQ or branch office for immediate support; their contact Information is as following:

CHENBRO HQ	CHENBRO Europe B.V.	CHENBRO Micom (USA) Inc.
Tel: 886-2-8226-5500	Tel: 31-40-295-2045	Tel: 1-909-947-3200
Fax: 886-2-8226-5423	Fax: 31-40-295-2044	Fax : 1-909-947-4300

www.chenbro.com

Contents

Copyright 2
Trademark 2
Technical Support 2
Contents 3
Revision History 4
Safety Information 5
Conventions Used in this Manual 5
Getting Start with SAS (Serial Attached SCSI) Expander Card 6
    Unpacking and Checking the Contents 6
Technical Specifications 6
Introduction 7
    About this Guide 7
    Introducing the SAS Expander Card 7
Features 8
    General 8
    High-Speed I/O 8
    Application 8
SAS Expander Card Hardware 9
    SAS Expander Card Layout 9
    HDD Failure LED Signal Connector 10
    Firmware Setting Jumper 10
    Mechanical Dimension 10
Mini-SAS Cables 11
Chassis Assembly Example 12
    Example for RM23212 chassis Mini-SAS backplane wiring 12
Compatible SAS RAID Cards 13

www.chenbro.com

Revision History

Date	Modifications
Sep. / 01 / 2009	● **First Release**

www.chenbro.com

Safety Information

- **Read the installation instructions before connecting to the power source.**
- **Only trained and qualified personnel should be allowed to install, replace or service this equipment.**
- **Never install this product in a wet environment.**
- **Position system cables and power cables carefully; route system cable and the power cable and plug so that they cannot be stepped on or tripped over. Be sure that nothing rests on your system component cables or power cable.**

Conventions Used in this Manual

The following conventions are used in this manual.

	Note Icon: **Provides more information on the current topic.**

	Important Icon: **Provides important information on the current topic that must not be overlooked.**

www.chenbro.com

Getting Start with SAS (Serial Attached SCSI) Expander Card

Thanks for purchasing CHENBRO SAS Expander Card! This section covers unpacking and identifying components.

Unpacking and Checking the Contents

The complete package includes the following items:

Item Description	Quantity	Picture
Low Profile SAS Expander Card	1	
Mini-SAS Cable, 350mm	1	
Quick Guide	1	

Technical Specifications

Mini-SAS Ports	Internal Input from SAS RAID Card：4-port (1x Mini-SAS) Internal Output to Backplane：24-port (6x Mini-SAS)
Number of Supported SAS / SATA-II in directly connection of HDD	24 HDDs (Internal connection)
Mechanical Dimension	Refer to Page 10
Power Connector Type	4-Pin Connector
Power Dissipation	12 Watts
Operating Temperature	0~50 ℃ (32~122 ℉)
Relative Humidity	20%~90%, non-condensing

www.chenbro.com

Introduction

About this Guide

The SAS expander card user's manual provides the information for functions, capabilities, configuring and maintaining RAID arrays hosted by the expander card.

Introducing the SAS Expander Card

SAS expander card expands one SAS address to a number of additional ports. It is an optimal device for usage in data centers

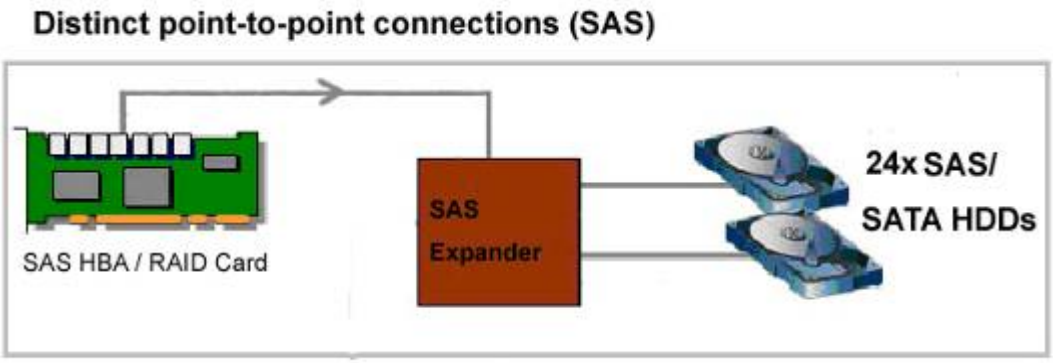

The CHENBRO 28-port low profile SAS expander card provides high performance, high disk drive connectivity, scalability and flexibility in various storage environments. It is a valuable solution to other expansive and complex topologies. The SAS expander is ideal for high availability, scalable server clustering environments, front-end storage subsystems used in clusters, SANs and NAS environments.
The CHENBRO SAS Expander is based on LSI SASX28 IC that enables the connection of multiple drive devices in directly attached SAS or SATA. Each expander PHY performs SAS and SATA transfer rate at 3.0 Gbit/s or 1.5 Gbit/s with individual configurations.
The SAS expander IC supports the Serial SCSI Protocol (SSP), SATA Tunneled Protocol (STP) and Serial Management Protocol (SMP). Those are based on SAS protocol and described in the SAS standard v1.0 and V1.1.

www.chenbro.com

Features

General

- **Flexible application of 28-port Low Profile SAS Expander Card**
- **Support HDD Failure / Activity Indication and HDD ID Mapping**
- **Compatible with PCI-Express 4X, 8X, 16X & PCI slots on motherboard**

High-Speed I/O

- **1.5 Gbit/s or 3.0 Gbit/s operations**
- **Automatic negotiation of linking speed**

Application

- **SAS / SATA HDD NAS storage sever or enclosure**
- **Security system**
- **Video streaming / editing workstation**

	SAS expander card must be used only with SAS RAID card such as LSI Logic MegaRAID SAS 8888ELP

	The supported HDD quantity is depended on the capability of the SAS RAID card in the system.

www.chenbro.com

SAS Expander Card Hardware

SAS Expander Card Layout

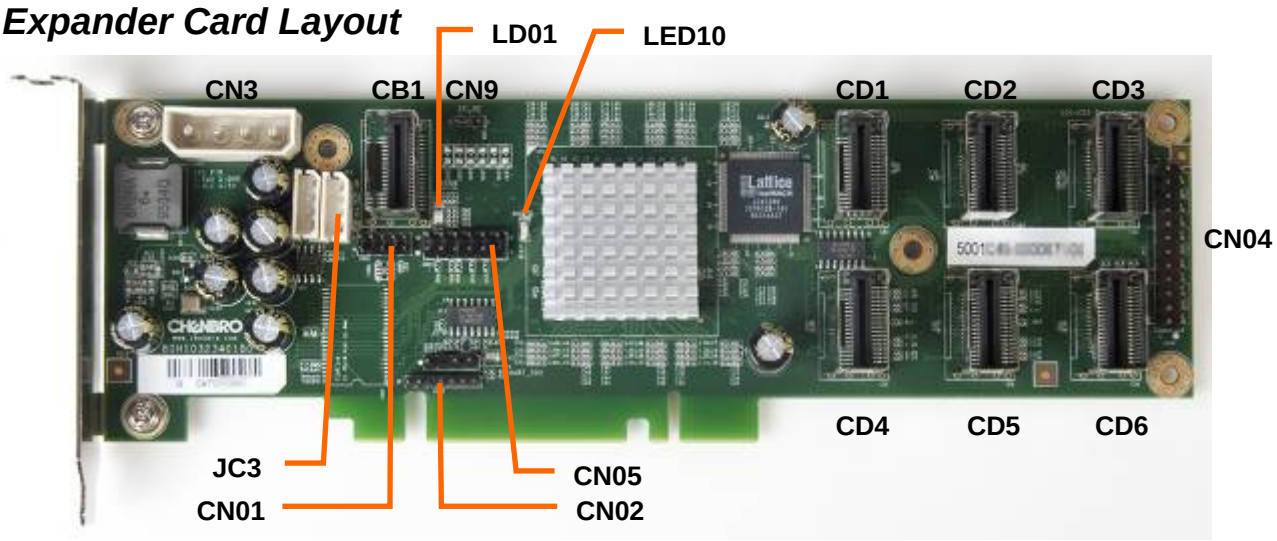

Components	Description	Function
CB1	Mini-SAS SFF-8087 Connector – Internal Input	Internal input from SAS RAID Card
CD1~CD6	Mini-SAS SFF-8087 Connectors – Internal Output	Internal output to SAS / SATA-II HDDs
CN3	DC in, 4-Pin Connector	From Power Supplier
LED10	SAS Expander Status LED	Green LED blinking indicates SAS Expander works / ready
LD01	Internal Input Status LED	Green LED blinking indicates internal input link activity; Red LED indicates no signal connection
CN04	Individual HDD Fault LED Connectors	Indicates HDD faults, refer to page 10
CN9	Firmware Setting Jumper	Firmware function selection, refer to page 10
CN01	Firmware (F/W) Upgrade Connector	Upgrade F/W to latest version
JC3 CN02 CN05	Function Reserved	

	Mini-SAS Cable Connector SFF-8087

	The internal input Mini-SAS connector CB1 is only available to connect with SAS RAID card / controller. It will not work when connecting other SAS expander products.

	CK12804 version B0 supports the internal SAS Sideband signal SFF-8485 (SGPIO) Interface. Connecting SAS RAID card and backplane with standard Mini-SAS cable with side band, the HDD failure LEDs on backplane will be lit and indicate the corresponding HDD has failed or is in the Unconfigured-Bad state. In this configuration, use one CK12804 connects up to 24 HDDs directly. Side bands of both types of SAS connectors support the SGPIO interface.

www.chenbro.com

HDD Failure LED Signal Connector

CK12804 provides two modes to indicate HDD failure LED. Connector CN04 is the cable direct-attach configuration. Direct attach is defined as a maximum of one HDD connected directly to each port.

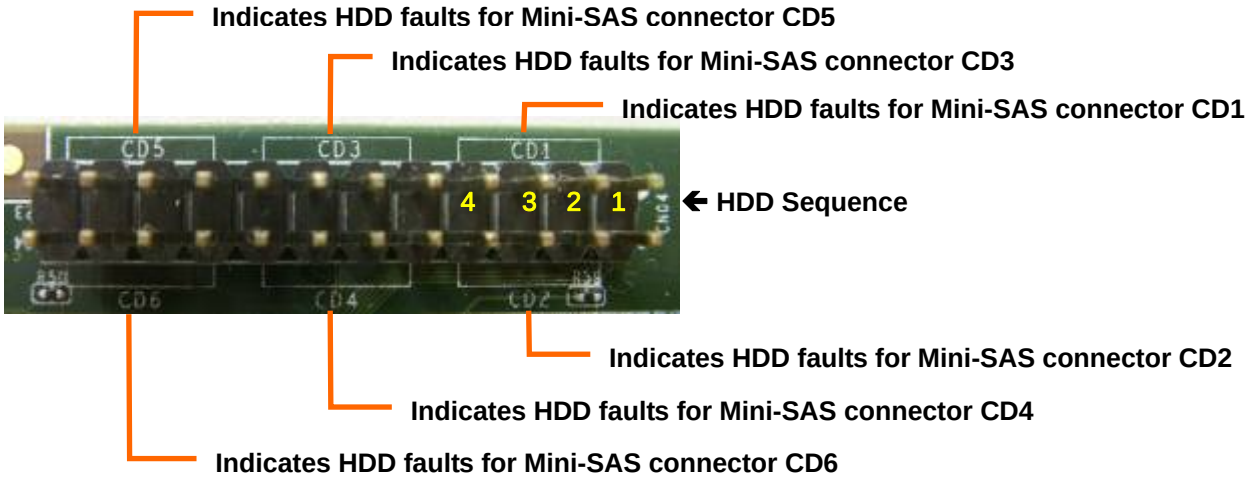

	There is one LED per port (pin). When lit, each backplane LED indicates the corresponding HDD has failed or is in the Unconfigured-Bad state. Refer to SAS RAID cards user's manual for more information about HDD states.

Firmware Setting Jumper

- **Jumper set on pin 1 & 2: Enable the upgraded firmware version**

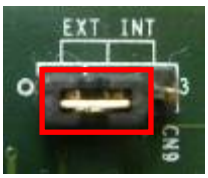

Default setting

- **Jumper set on pin 2 & 3: Enable the original firmware version**

Mechanical Dimension

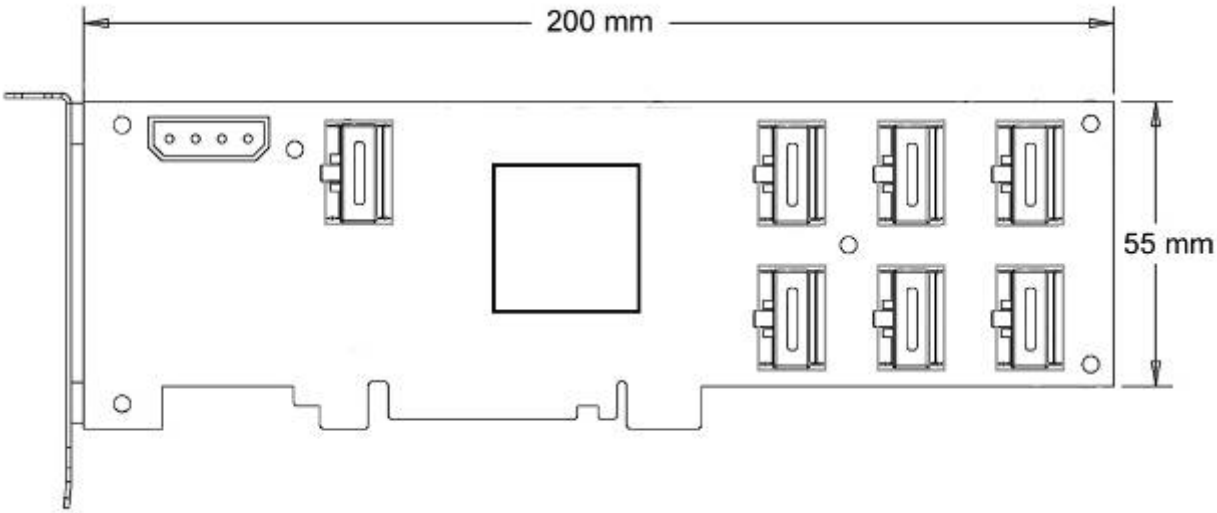

www.chenbro.com

Mini-SAS Cables

The Mini-SAS backplane provides most benefits to users using the same backplane to support various SAS/SATA RAID card via different conversion cables. Chenbro provides various cables for different interfaces which include the followings:

(A) SFF-8087 to SFF-8087

(B) SFF-8087 to 4 SATA

Cable Type	Connector		P/N	Length
	Host (RAID Card) Side	Backplane Side		
A1	Mini-SAS (SFF-8087 36pin)	Mini-SAS (SFF-8087 36pin)	26H113215-027	200 mm
A2	Mini-SAS (SFF-8087 36pin)	Mini-SAS (SFF-8087 36pin)	26H113215-028	350 mm
A3	Mini-SAS (SFF-8087 36pin)	Mini-SAS (SFF-8087 36pin)	26H113215-029	500 mm
A4	Mini-SAS (SFF-8087 36pin)	Mini-SAS (SFF-8087 36pin)	26H113215-030	600 mm
C	Mini-SAS (SFF-8087 36pin)	SATA-7Pin x4	26H113215-009	450 mm, 500 mm 650 mm, 750 mm

www.chenbro.com

Chassis Assembly Example

See below for the example of how the wiring to be performed.

Example for RM23212 chassis Mini-SAS backplane wiring

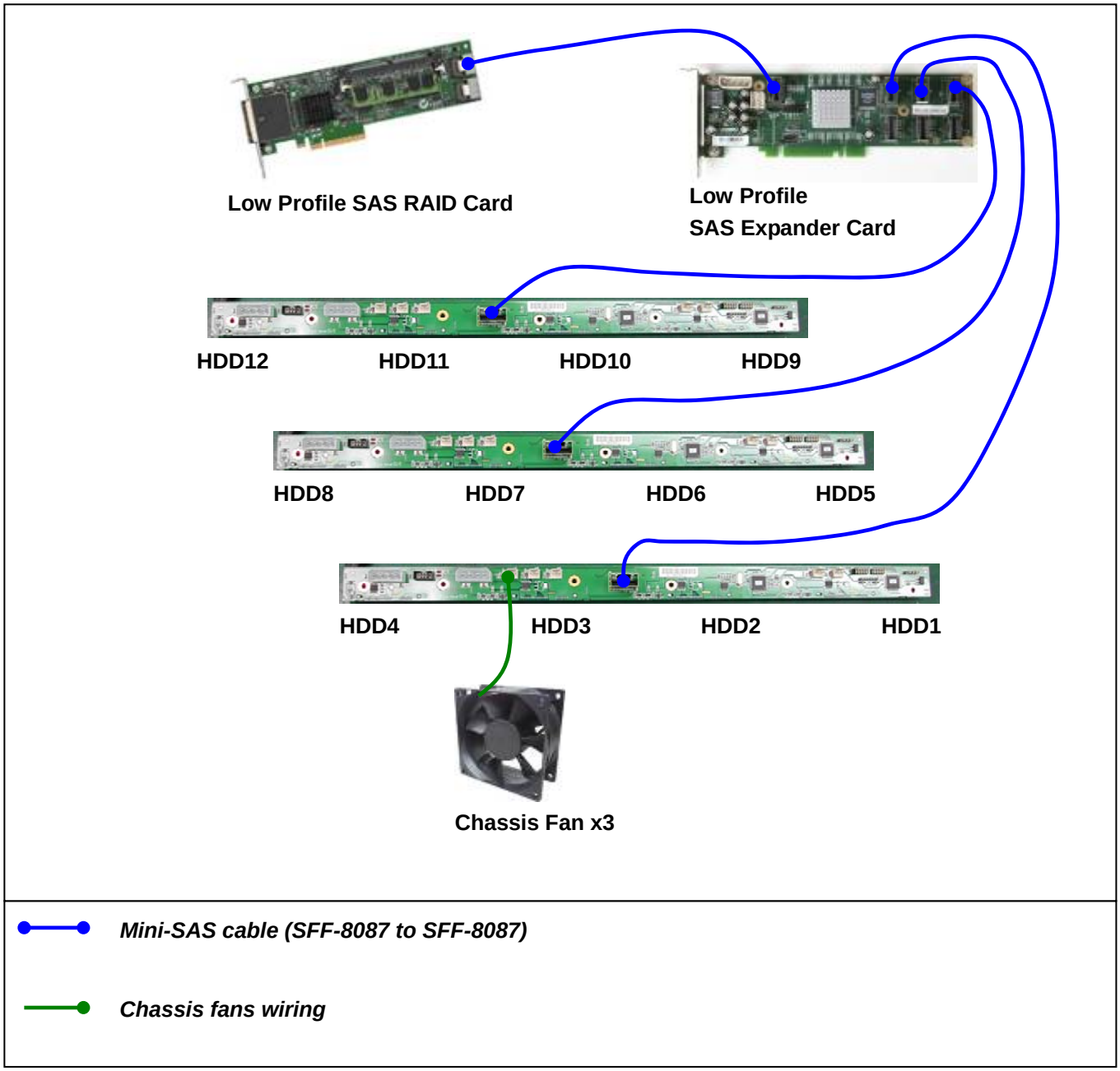

Mini-SAS cable (SFF-8087 to SFF-8087)

Chassis fans wiring

www.chenbro.com

Compatible SAS RAID Cards

CK12804 Firmware Version AC11 ; Hardware Version B0

Manufacture	Model Number	Maximum Physical Drives per SAS RAID Card	Verified Maximum Physical Drives	Verified RAID Card Firmware Version
intel	SRCSASRB	32	32	1.40.32-0580
LSI	MegaRAID SAS 84016E	122	48	1.12.230-0598
	MegaRAID SAS 8888ELP	240	48	1.40-42-0615
areca	ARC-1680	128	48	V1.46
adaptec	5445	256	48	5.2-0 (16501)
	5805	256	48	5.2-0 (16501)
3ware	9690SA	128	48	FH9X 4.08.00.006
HighPoint	Rocket 4320	128	48	V1.2.17.19
	Rocket 4321	128	48	V1.2.17.19

The maximum quantity of supported physical drives per SAS RAID Card is depended on the capability of the SAS RAID card in the system. Refer to the technical document or user guide provided by RAID card manufacturer.

www.chenbro.com